Network devices

The main devices that interconnect networks are hubs, switches, and routers, as described in the following sections.

The following is some terminology related to the operation of network devices:

■ ***Domain*** is a specific part of a network.

■ ***Bandwidth*** is the amount of data that can be carried across a network in a given time period.

■ ***Unicast data*** is data meant for a specific device.

■***Multicast data*** is data destined for a specific group of devices; again, a special address indicates this.

■ ***Broadcast data*** is data meant for all devices; a special broadcast address indicates this.

■ ***Bandwidth domain***, known as a ***collision domain*** for Ethernet LANs, includes all devices that share the same bandwidth.

■ ***Broadcast domain*** includes all devices that receive each others' broadcasts (and multicasts).

Devices in the same bandwidth domain are also in the same broadcast domain; however, devices in the same broadcast domain can be in different bandwidth domains.

Segmentation

Dividing up a LAN into smaller collision domains (segments) is called segmentation. General benefits of LAN segmentation:

- Increased bandwidth per user
- Keeping local traffic
- Reduced broadcasts

Hubs

1. Works at Layer Physical layer.
2. Intermediary device to connect more than two computers (connects multiple devices so that they are logically all on one LAN).
3. No intelligence—it sends all data received on any port to all the other ports (devices connected through a hub receive everything that the other devices send, whether or not it was meant for them).
4. All devices connected to a hub are in one collision domain and one broadcast domain.
5. Active hubs not only connected hosts, but they also regenerate signals.

Repeaters

1. Works at Layer Physical layer.
2. A repeater is a network device used to regenerate a signal.
3. Repeaters regenerate analog or digital signals distorted by transmission loss due to attenuation.
4. A repeater does not perform intelligent routing.

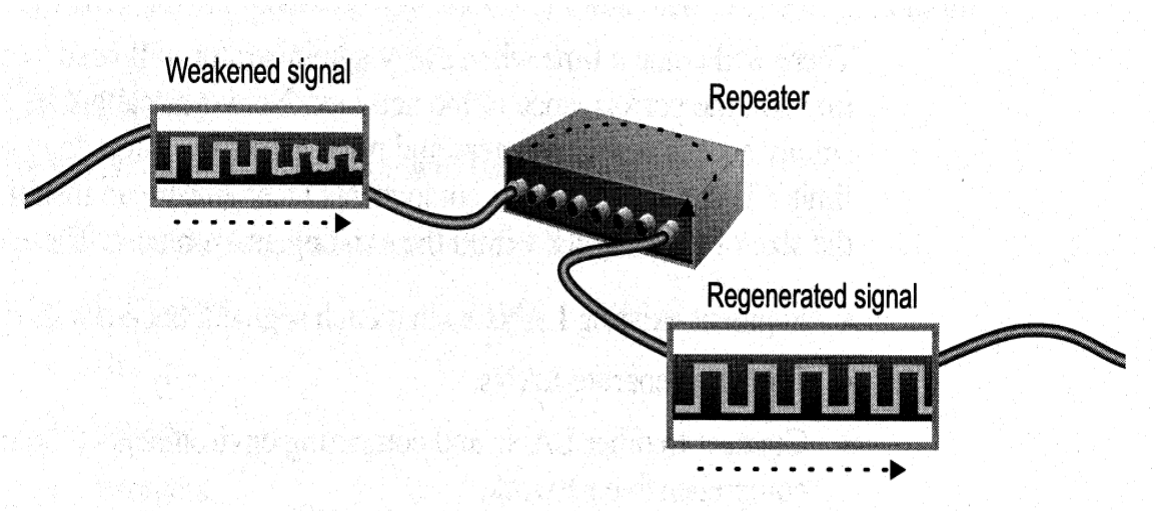

Limitations and Features

- Do not isolate and filter packets
- Can connect different types of media

Bridge

1. It operates at the Data Link layer.
2. Bridges provide connections between LANs (Used to break larger network segments into smaller network segments).
3. A bridge uses the MAC address to perform its tasks.
4. Bridges filter some traffic based upon MAC addresses.
5. Bandwidth is used more efficiently.
6. All the ports on a bridge support one type of media.
7. Bridges typically have ***less port*** than switches.
8. Bridges are significantly ***slower than switch*** because they switch in hardware.
9. Has one input and one output
10. Used to isolate network traffic and computers
11. Has the intelligent to examine incoming packet source and destination addresses

How Bridges Work

• Bridges work at the Media Access Control Sub-layer of the OSI model

• Routing table is built to record the segment no. of address

• If destination address is in the same segment as the source address, stop transmit

• Otherwise, forward to the other segment

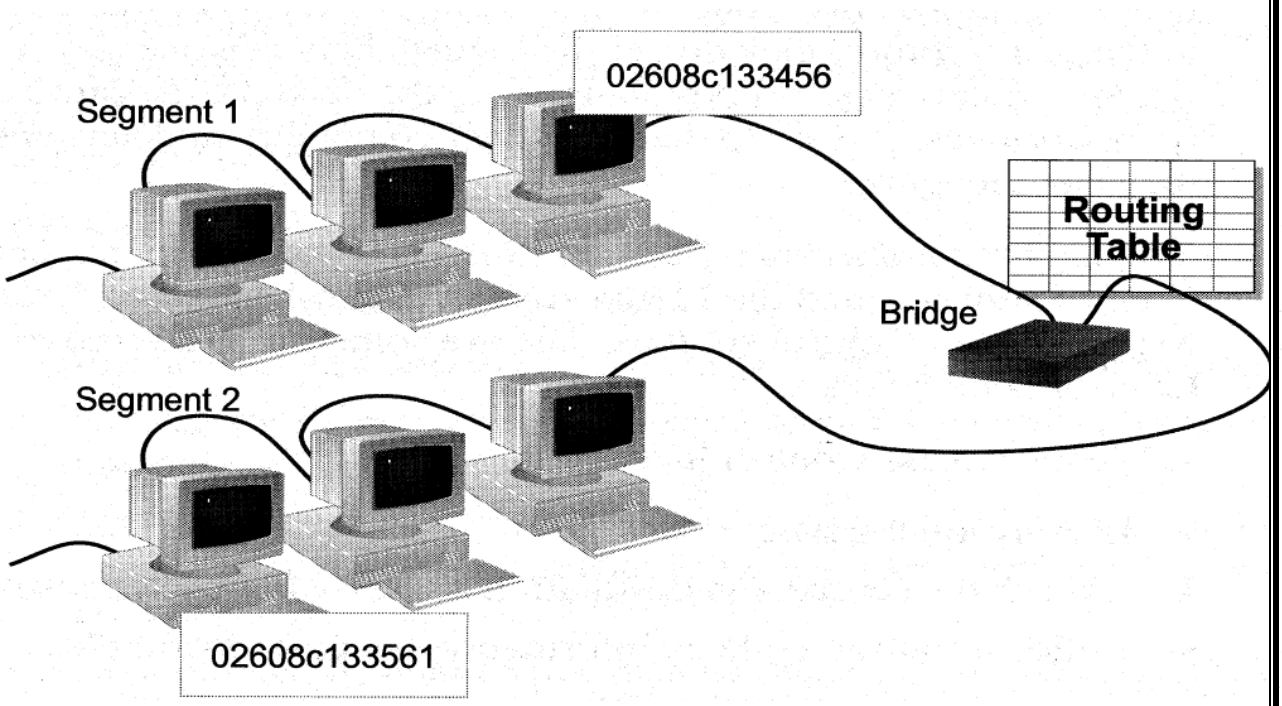

Creating a Switching Table

- Based on the addresses of the sending computers
- New addresses are added if they are not in the table

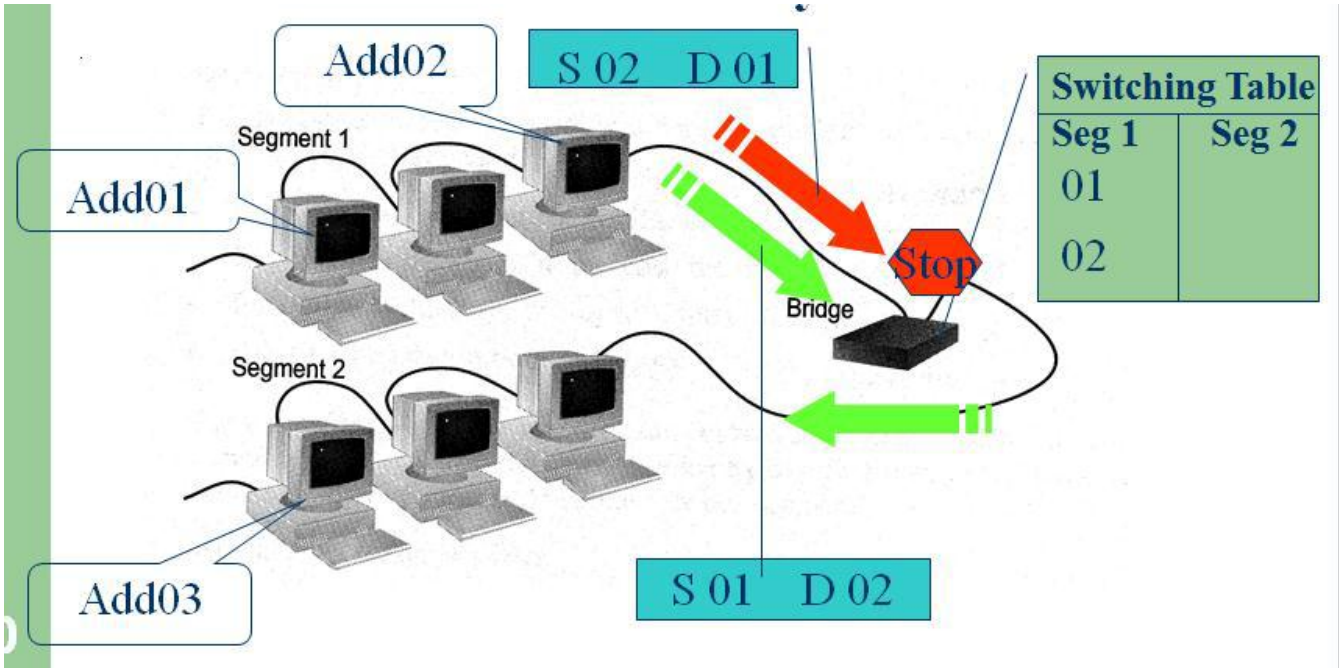

Remote Bridges

• Bridges are often used in large networks that have widely dispersed segments
• Remote bridges can be used to connect remote segments via data-grade telephone line

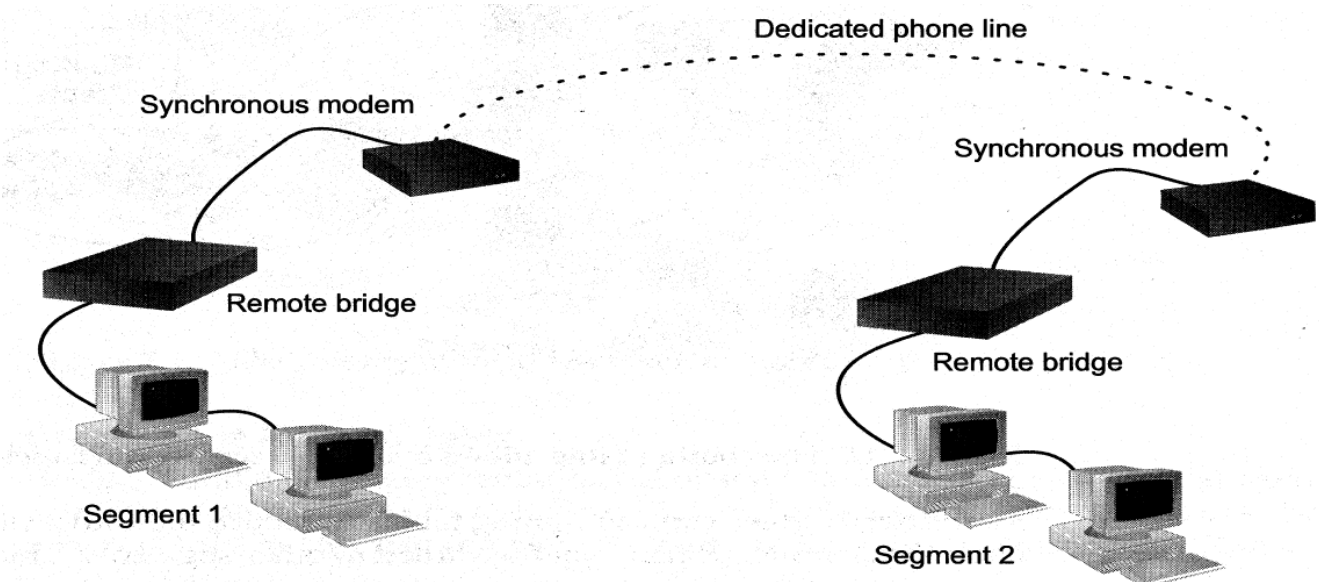

Switches

1. It operates at the Data Link layer.
2. To improve performance, LANs are usually divided into multiple smaller LANs interconnected by a Layer 2 LAN switch.
3. Have some intelligence—they send data to a port only if the data needs to go there.
4. The traffic received by a device is reduced because only frames addressed to a specific device are forwarded to the port on which that device is connected.
5. Switches ***read the source and destination MAC addresses in the frames*** and therefore can keep track of who is where, and who is talking to whom, and send data only where it needs to go.
6. All devices connected to one switch port are in the same collision domain, but devices connected to different ports are in different collision domains.
7. Switches are significantly ***faster than bridge*** because they switch in hardware.
8. Switches can interconnect LANs of ***unlike bandwidth***. A 10-Mbps Ethernet LAN and a 100Mbps Ethernet LAN
9. Switches typically have ***more ports*** than bridges.

dvantages of Switches

• Switches divide a network into several isolated channels (or collision domains)
• Reduce the possibility of collision
• Each channel has its own network capacity
• Suitable for real-time applications, e.g. video conferencing
• Since isolated, hence secure